PRINCESS

Wall arm

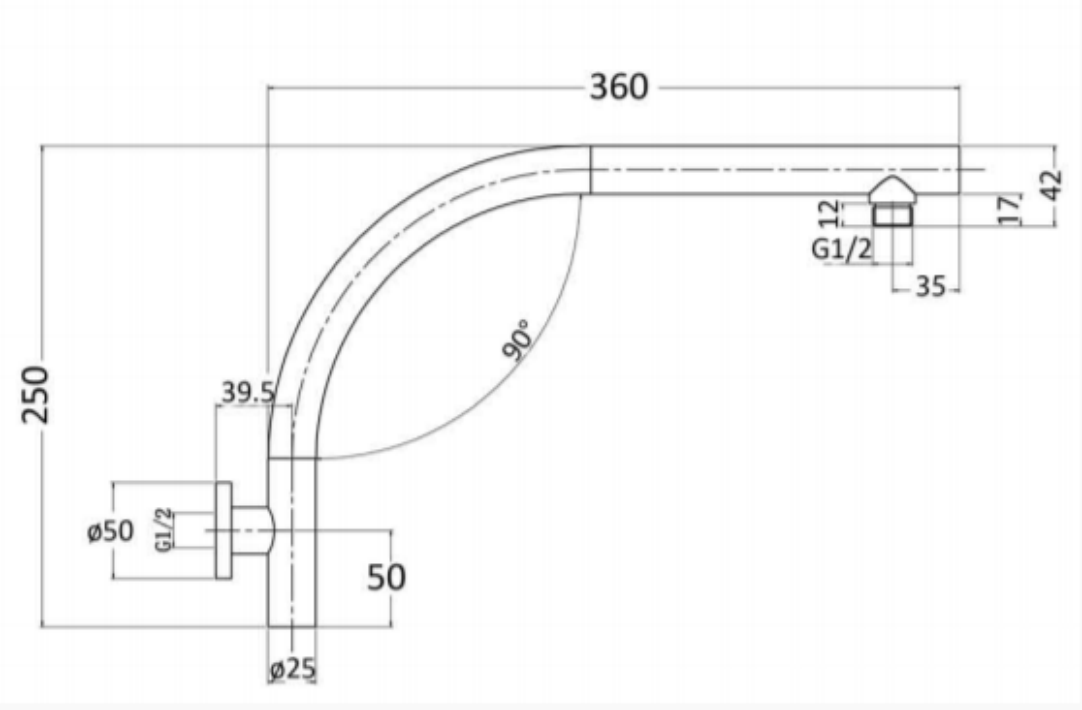

- Wall mount shower arm
- 360mm x 25mm diameter
- Brass - chrome plated
- cover plate 50mm x 15mm

SKU: 1631666

7 Year Warranty

swan | bathrooms

swanbathrooms.com.au I 1800 571 060

Disclaimer: Dimensions are nominal measurements only and are subject to change without notice.
Always use physical products for setouts and roughing in, as specification drawings can vary from actual product received.
Warranty: Conditions apply - full terms and conditions available upon request V: 10/21